Table 6. *Observed and calculated relative intensities for* 10.*l reflexions of polytype* $20H_3$

l	Observed intensity*	Calculated intensity	*l*	Observed intensity*	Calculated intensity	Further observed relation between intensities
0	*a*†	1	21	*mw*	8	
1	*a*†	0	22	*w*	7	
2	*a*†	0	23	*vw*	6	
3	*a*†	0	24	*a*	6	
4	*a*	1	25	*a*	5	
5	*a*	2	26	*a*	4	$15 \simeq 16 \simeq 17 \simeq 18$
6	*a*	3	27	*a*	4	$12 \simeq 13 \simeq 14 \simeq 19 \simeq 21$
7	*vvw*	4	28	*a*	3	$15 > 14$
8	*vvw*	4	29	*a*	3	$21 > 22 > 23$
9	*vvw*	5	30	(*s*)	274	
10	(*vs*)§	100	31	‡	2	
11	*w*	7	32	‡	1	
12	*mw*	8	33	‡	1	
13	*mw*	8	34	‡	0	
14	*mw*	8	35	‡	0	
15	*ms*	9	36	‡	0	
16	*ms*	9	37	‡	0	
17	*ms*	9	38	‡	0	
18	*ms*	9	39	‡	0	
19	*mw*	8	40	‡	0	
20	(*vs*)	206				

* As in Table 1($n=20$).
† and ‡ See Table 1.
§ The reflexions in parentheses could not be well-resolved owing to their overlapping with the $2H$ spots.

We gratefully acknowledge the helpful cooperation received from Dr V. K. Agrawal and Mr Gyaneswar of this laboratory. One of us (GL) is indebted to the University Grants Commission, India, for the award of a Junior Research Fellowship.

References

AGRAWAL, V. K. & TRIGUNAYAT, G. C. (1969). *Acta Cryst.* A**25**, 401, 407.
AGRAWAL, V. K., CHADHA, G. K. & TRIGUNAYAT, G. C. (1970). *Acta Cryst.* A**26**, 140.
CHADHA, G. K. & TRIGUNAYAT, G. C. (1967). *Acta Cryst.* **23**, 726.
JAGODZINSKI, H. (1954). *Acta Cryst.* **7**, 300.
JEFFERY, J. W. & MURTY, T. S. (1962). *Nature, Lond.* **193**, 1172.
MITCHELL, R. S. (1956). *Z. Kristallogr.* **108**, 296.
TRIGUNAYAT, G. C. & CHADHA, G. K. (1971). *Phys. stat. sol.* (*a*), **4**, 9.

Acta Cryst. (1971). B**27**, 2298

The Crystal and Molecular Structure of Bismuth Trichloride

BY S. C. NYBURG, G. A. OZIN AND J. T. SZYMAŃSKI

Lash Miller Chemical Laboratories, University of Toronto, Toronto 181, *Ontario, Canada*

(*Received* 12 *March* 1971)

The crystal structure of bismuth trichloride has been determined. Three-dimensional data were collected on a four-circle diffractometer using Mo $K\alpha$ radiation. The space group is $Pn2_1a$ with orthorhombic cell $a=7{\cdot}641$ (2), $b=9{\cdot}172$ (7), $c=6{\cdot}291$ (2) Å. The final residual for the 935 observations is 4·43 %. The molecular structure consists of a bismuth atom closely associated with three chlorine atoms in the shape of distorted trigonal pyramid and with five other chlorine atoms at bridging distances. The geometry of this eightfold coordination is best described as a trigonal prism with six chlorine atoms at its corners, and with two more chlorine atoms in face-bridging positions. The three close Bi–Cl distances are 2·468, 2·513 and 2·518 Å; distances to the bridging chlorines range from 3·216 to 3·450 Å.

Introduction

Examination of the gas-phase Raman spectra of some Group VA trihalides (Denchik, Nyburg, Ozin & Szymański, 1971) revealed significant differences between the spectra of antimony and bismuth trichloride. The spectrum of the latter shows modes that were interpreted as being due to strong chlorine bridging. The

then-existing X-ray structural information for bismuth trichloride was based on powder diagrams, interpreted in terms of cubic-crystal symmetry (Wollen & Mayer, 1958). Therefore, a complete X-ray investigation was undertaken to determine the precise molecular geometry and, hence, allow a detailed interpretation of the spectrum.

Experimental

Crystals of bismuth trichloride were grown by slow vacuum sublimation. One such crystal was mounted in a Lindemann capillary tube and was used for all subsequent X-ray examinations. The crystal was tabular (101), with forms $\{10\bar{1}\}$ and $\{110\}$. Dimensions were 0·37 mm (along **b**), 0·17 mm wide and 0·08 mm thick.

Data collection

The crystal was mounted about [010] and $[1\bar{1}0]$, and *h*0*l* and *hhl* Weissenberg photographs were taken using Cu $K\alpha$ radiation ($K\alpha_1 = 1{\cdot}54051$, $K\alpha_2 = 1{\cdot}54433$ Å). A total of 67 *h*0*l* and *hhl* reflexions in the $47° < \theta < 83°$ range was used to refine the cell parameters, utilizing a least-squares procedure that included corrections for absorption and eccentricity (Buerger, 1942). The uncertainties quoted are three times the standard deviations obtained from the least-squares matrix.

The same crystal was mounted about the *b* axis, and the intensity data were collected on a Picker four-circle diffractometer, using Mo $K\alpha$ radiation, and θ–2θ scan. The scan rate was 1°/min for a peak base width of 2°, and an 80 sec total background count. The large size and tabular shape of the crystal resulted in 0*k*0 φ sweeps having very large variations in intensity (as much as 30:1 for the 020 reflexion). Accordingly, φ was restricted to a 90° range where this variation was 2·5:1 at most. This latter variation could be corrected to within 10% by Gaussian integration for absorption (Coppens, 1970), using a grid $24 \times 32 \times 16$ (=12288 points). Because of the restriction we imposed on crystal orientation, data collection was confined to the octant suffering least from absorption, in particular, the very severe absorption that would have resulted from [010] lying close to the direct, or to the diffracted, beam was not encountered. The usual data reduction was carried out. Reflexions were considered observed if the intensity $I > 2\sigma(I)$. Counting statistics and an Abrahams factor (Abrahams & Bernstein, 1965) of $c = 0{\cdot}004$ were used to evaluate $\sigma(I)$. A total of 935 intensities were observed, and these were used to solve and refine the structure.

Structure analysis

The structure was solved from the Patterson function by routine application of the heavy-atom method; it was refined initially in the centrosymmetric space group *Pnma*, to conform to the known structures of $SbCl_3$ (Lindqvist & Niggli, 1956) and β-$SbBr_3$ (Cushen & Hulme, 1962). The final conventional residual *R* was 4·67%. The scattering curves used were those for Bi^0 and Cl^0, evaluated from Hartree–Fock wave functions, using coefficients given by Cromer & Mann (1968). For the three chlorine atoms and for bismuth, the real and imaginary parts of the anomalous scattering corrections were applied: for Cl: 0·1, 0·2e; for Bi: −4·5, 11·7e (*International Tables for X-ray Crystallography*, 1962).

In space group *Pnma* four molecules must have either *m* or $\bar{1}$ symmetry. The latter, however, is not possible (in the absence of disorder) for a molecule AX_3. Hence, four Bi atoms and four Cl atoms per cell must lie on mirror planes. The non-centric space group $Pn2_1a$ does not require any molecular symmetry. As the correct space group cannot be uniquely determined from the systematic absences, the restrictions on molecular symmetry were relaxed; further structure refinement was then attempted in space group $Pn2_1a$, for which initial atomic coordinates were those obtained from the centrosymmetric refinement. The structure refined to a final conventional residual of 4·43%. Because of the significant anomalous scattering for Cl and Bi, another set of atomic coordinates, related to the

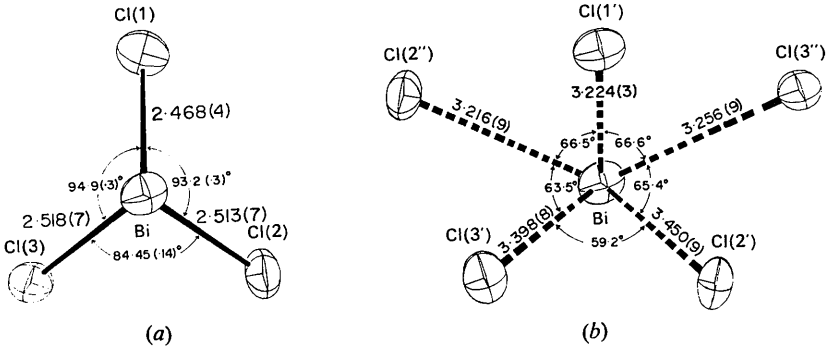

Fig. 1. (*a*) Bismuth trichloride molecule, showing bond lengths and angles for the bonded chlorine atoms. The diagram is drawn viewed normal to the plane of the three chlorine atoms, with bismuth *above* the plane. (*b*) Irregular pentagonal cap of five bridging chlorine atoms, showing bond lengths, and angles for adjacent atoms. The diagram is drawn in the same orientation as (*a*). All five chlorine atoms are *above* the bismuth atom. Thermal ellipsoids are scaled to include 75% probability.

non-centric set by $\bar{1}$ at the origin, was also tried to see which set gave better agreement and, hence, which is the absolute configuration of the molecule in the crystal examined. The residual for this second set was 4·52%. Results of the structure determination given here are based, therefore, on the non-centric set of parameters at $R=4{\cdot}43\,\%$.

Crystal data

Crystal system, orthorhombic.
$a=7{\cdot}641$ (2), $b=9{\cdot}172$ (7), $c=6{\cdot}291$ (2) Å.
Cell volume $=440{\cdot}9\pm0{\cdot}6$ Å^3, F.W. $=315{\cdot}34$.
$D_c=4{\cdot}75$ g.cm^{-3}, for $Z=4$.
$D_{\rm obs}=4{\cdot}75$ g.cm^{-3}
(*Handbook of Chemistry and Physics*, 1967).
Linear absorption coefficient, μ(Mo $K\alpha$) $=396$ cm^{-1}.
Systematic absences: $0kl$, $k+l=2n+1$,
$hk0$, $h=2n+1$.
Space group: $Pnma$ or $Pn2_1a$ (from systematic absences),
$Pn2_1a$ (from structure analysis).

Space-group ambiguity

Recently, some structures, in which space-group ambiguity (centric *vs.* non-centric models) has led to important molecular differences in the two models (Parthasarathy, Sime & Speakman, 1969; Choi & Boutin, 1968; Leung & Nyburg, 1969), have been published.

Usually, two criteria are applied to decide which model is correct: (1) the Hamilton $\mathscr{R}$ test (Hamilton, 1965) is applied to determine the significance level of the difference, (2) even if the Hamilton test is indicative of one particular model, the model that makes more chemical sense in its bond lengths, angles, and symmetry is chosen as the correct one. Frequently, the difference between the models is so gross, that there is no difficulty of choice.

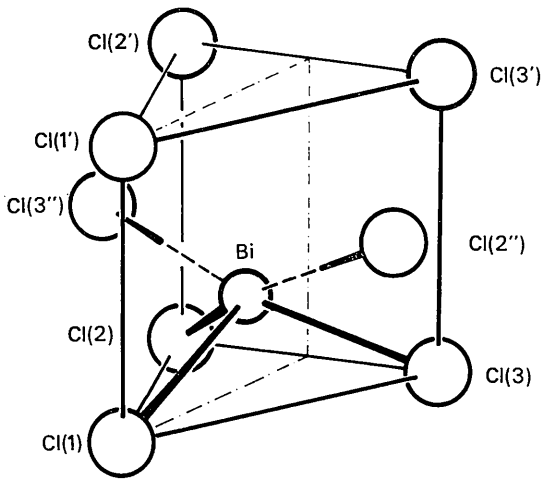

Fig. 2. Right triangular prism of chlorine atoms, which give eightfold coordination of bismuth. Pseudo mirror plane is indicated by broken line.

Table 1. *Atomic fractional coordinates and thermal parameters (e.s.d.'s in parentheses)*

Temperature factor $=\exp[-(\beta_{11}h^2+\beta_{22}k^2+\beta_{33}l^2+2\beta_{12}hk+2\beta_{13}hl+2\beta_{23}kl)]$.

	x	y	z	β_{11}	β_{22}	β_{33}	β_{12}	β_{13}	β_{23}
Bi	−0·04678 (5)	−0·25*	−0·02328 (7)	0·00636 (7)	0·00683 (6)	0·01125 (12)	−0·00138 (13)	−0·00106 (5)	−0·00180 (21)
Cl(1)	0·0567 (4)	−0·2495 (15)	−0·3484 (7)	0·0083 (4)	0·0087 (5)	0·0124 (7)	−0·0003 (12)	−0·0009 (4)	0·0011 (14)
Cl(2)	0·1762 (9)	−0·4353 (09)	−0·1382 (17)	0·0108 (10)	0·0041 (6)	0·0177 (17)	0·0007 (6)	0·0012 (10)	0·0011 (7)
Cl(3)	0·1750 (9)	−0·0668 (09)	−0·1509 (16)	0·0013 (10)	0·0063 (8)	0·0137 (14)	−0·0012 (7)	0·0050 (9)	−0·0002 (9)

* Defines origin

A further indication of the incorrectness of a given model is that the least-squares refinement is ill-conditioned, the standard deviations are large, and the shifts are erratic. The difficulty arises in applying the second criterion, when both models are chemically reasonable; yet there are apparently significant differences between them. It appears, then, that the only choice is to use the Hamilton test.

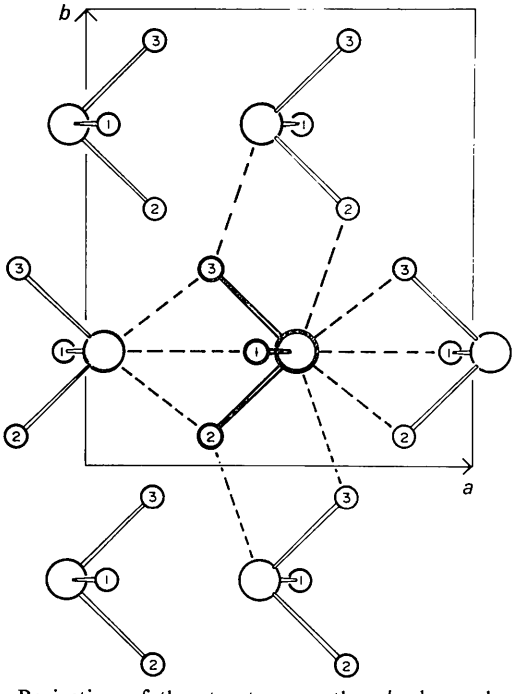

Fig. 3. Projection of the structure on the *ab* plane, showing the chlorine bridging that is present between a single $BiCl_3$ molecule and its neighbours. Two unit cells in the *z* direction are involved.

In the present structure, the two models resulting from the analysis in the centric and non-centric space groups are very similar, and both are chemically reasonable. The refinement in the non-centric case progressed somewhat slowly, presumably because of very strong correlations between parameters; but the shifts were always in the same direction (there being no oscillation), and the standard deviations are reasonable. Thus, the second criterion (above) cannot be applied to rule out one model or the other, and statistical analysis must be used.

The number of varied parameters in the two non-centric models is the same, so that the improvement from 0·0452 to 0·0443 in *R* is significant. The question, however, remains: Is the improvement in the residual from 0·0467 to 0·0443 (weighted *R*'s 0·0589, 0·0556) significant when the number of observations is 935? Application of the Hamilton $\mathscr{R}$ test indicates the expected ratio of weighted *R*'s, for an increase of 14 in the number of variables, is 1·018 at the $\frac{1}{2}$% significance level. The observed ratio is 1·059, indicating that the improvement is *very* significant, and that the correct space group is $Pn2_1a$. Use of the ratio test assumes that systematic errors are not important. The only source of concern in the present case might be the absorption corrections. However, we are satisfied in our own minds that these have been carried out as accurately as possible, and they should not invalidate our conclusions.

Table 2. *Bond lengths and angles*

(*a*) Bond lengths (e.s.d.'s in parentheses):

Bi–Cl(1)		2·468 (4) Å
Bi–Cl(2)		2·513 (7)
Bi–Cl(3)		2·518 (7)
Bi···Cl(1′)	$(\frac{1}{2}+x,\ y,\ -\frac{1}{2}-z)$	3·224 (3)
Bi···Cl(2′)	$(-\frac{1}{2}+x,\ y,\ -\frac{1}{2}+z)$	3·450 (9)
Bi···Cl(2″)	$(-x,\ \frac{1}{2}+y,\ -z)$	3·216 (9)
Bi···Cl(3′)	$(-\frac{1}{2}+x,\ y,\ -\frac{1}{2}+z)$	3·398 (8)
Bi···Cl(3″)	$(-x,\ \frac{1}{2}+y,\ -z)$	3·256 (9)

(*b*) Bond angles around bismuth (°) with e.s.d.'s in parentheses.

	Cl(2)	Cl(3)	Cl(1′)	Cl(2′)	Cl(3′)	Cl(2″)	Cl(3″)
Cl(1)	93·2 (3)	94·9 (3)	88·72 (6)	141·4 (3)	140·4 (3)	78·3 (4)	77·2 (4)
Cl(2)	–	88·45 (14)	137·4 (3)	84·6 (2)	125·8 (4)	155·0 (2)	72·4 (2)
Cl(3)		–	137·8 (3)	123·0 (4)	84·2 (2)	73·1 (2)	154·9 (2)
Cl(1′)			–	68·6 (2)	67·5 (2)	66·5 (3)	66·6 (3)
Cl(2′)				–	59·17 (9)	116·65 (14)	65·4 (3)
Cl(3′)					–	63·5 (3)	117·13 (13)
Cl(2″)						–	127·01 (9)

(*c*) Bond angles around bridging chlorine atoms (°):

Bi——————Cl(1)···Bi$(\frac{1}{2}+x,\ y,\ -\frac{1}{2}-z)$	128·64 (13)
Bi——————Cl(2)···Bi$(\frac{1}{2}+x,\ y,\ -\frac{1}{2}-z)$	105·1 (3)
Bi——————Cl(2)···Bi$(-x,\ -\frac{1}{2}+y,\ -z)$	107·9 (3)
Bi——————Cl(3)···Bi$(\frac{1}{2}+x,\ y,\ -\frac{1}{2}-z)$	106·5 (3)
Bi——————Cl(3)···Bi$(-x,\ \frac{1}{2}+y,\ -z)$	106·6 (3)
Bi$(\frac{1}{2}+x,\ y,\ -\frac{1}{2}-z)$–Cl(2)···Bi$(-x,\ -\frac{1}{2}+y,\ -z)$	145·7 (3)
Bi$(\frac{1}{2}+x,\ y,\ -\frac{1}{2}-z)$–Cl(3)···Bi$(-x,\ \frac{1}{2}+y,\ -z)$	145·4 (3)

Description of structure

The structure consists of $BiCl_3$ molecules. Each bismuth atom is strongly bonded to three chlorine atoms, and the molecule has a distorted trigonal pyramidal shape. Atomic fractional coordinates and thermal parameters are listed in Table 1. Bond lengths and angles are given in Fig. 1(*a*) and Table 2. Observed and calculated structure factors are listed in Table 3.

Bond lengths Bi–Cl(2) and Bi–Cl(3) are equal to within one standard deviation: 2·513 (7) and 2·518 (7) Å; the third bond, Bi–Cl(1), is much shorter: 2·468 (3) Å. There is no molecular symmetry as far as bond angles are concerned. The two angles opposite the equal Bi–Cl bonds are comparable, but not equal: 94·9 (3) and 93·2 (3)°; the third angle, the one opposite the shortest Bi–Cl bond, is much smaller: 84·45 (14)°.

A non-bonded bismuth–chlorine contact is probably about 4·1 Å (Pauling, 1960), and distances much less than this value can be considered as bonding or as bridging. In addition to the three bonded chlorine atoms around bismuth, five more chlorine atoms exist at distances between 3·216 (9) and 3·450 (9) Å on the side of bismuth *opposite* to the three bonded chlorine atoms [Fig. 1(*b*)]. This eightfold coordination is best described as a right trigonal prism, with two additional chlorine atoms in face-bridging positions (Fig. 2). Atoms Cl(1), Cl(2), and Cl(3), closely bonded to bismuth, form the base of the prism. Atoms Cl(1′), Cl(2′), and Cl(3′) lie in a plane that is virtually parallel to the base and vertically above their unprimed counterparts. Thus, three rectangular sides are formed. Atoms Cl(2″) and Cl(3″) lie in the middle of two of these sides. Also, a pseudo mirror plane relates Cl(2) to Cl(3), Cl(2′) to Cl(3′), and Cl(2″) to Cl(3″). The bismuth atom is not in the centre of the prism, but is much nearer the three bonded chlorine atoms at the base.

Thus, the structure is related to that of $PbCl_2$ where a trigonal prism coordination is observed, but with all three face-bridging positions (on the rectangular faces) being filled (Sahl & Zemann, 1961). An overall projec-

Table 3. *Observed and calculated structure factors*

The values represent the index *l*, $10\times F_o$ and $10\times|F_c|$.

L	FO	FC
H= 0, K= 0		
2	2061	2144
4	838	875
6	1182	1194
8	483	418
H= 0, K= 1		
1	340	326
3	939	962
5	1054	1054
7	820	817
9	846	849
H= 0, K= 2		
0	2534	2659
4	1583	1623
6	721	759
8	278	255
H= 0, K= 3		
1	684	732
3	506	544
5	1457	1532
7	711	709
9	452	377
H= 0, K= 4		
0	2560	2661
2	1871	1909
4	1153	1166
6	834	811
8	261	256
H= 0, K= 5		
1	538	506
3	765	825
5	658	657
7	691	646
9	626	454
H= 0, K= 6		
0	2437	2516
2	1332	1379
4	655	651
6	847	811
8	374	317
H= 0, K= 7		
3	471	444
5	871	832
7	559	532
9	463	377
H= 0, K= 8		
0	1075	1030
2	1145	1177
4	514	512
6	349	353
H= 0, K= 9		
1	149	165
3	283	315
5	694	670
7	426	390
H= 0, K= 10		
0	1179	1136
2	709	716
4	357	383
6	491	447
8	237	147
H= 0, K= 11		
1	249	235
3	325	337
5	242	216
7	358	252
H= 0, K= 12		
0	653	657
2	493	456
4	246	312
6	274	273
H= 0, K= 13		
1	115	116
3	119	116
5	374	339
H= 0, K= 14		
0	317	286
2	160	344
4	316	310
H= 1, K= 0		
1	2435	2763
2	762	791
3	1935	1983
4	582	539
5	1076	1073
6	516	519
7	492	465
9	254	162
10	177	107
H= 1, K= 1		
1	681	698
2	1264	1298
3	593	702
4	778	765
5	365	370
6	750	787
7	143	116
8	450	502
10	542	465
H= 1, K= 2		
1	2006	2077
2	597	558
3	2233	2351
4	218	216
5	553	1063
6	134	149
7	267	279
8	202	236
9	247	206
10	183	142
H= 1, K= 3		
1	1269	1269
2	534	655
3	152	129
4	855	866
5	254	262
6	806	839
7	391	385
8	715	653
10	441	381
H= 1, K= 4		
1	1861	1892
2	153	104
3	1403	1349
4	307	271
5	875	920
6	268	250
7	322	309
9	180	177
H= 1, K= 5		
1	262	313
2	975	985
3	710	716
4	543	568
5	305	320
6	585	580
8	748	668
10	489	344
H= 1, K= 6		
1	1563	1601
2	344	333
3	1252	1293
4	355	352
5	746	742
6	331	336
7	357	336
9	174	153
H= 1, K= 7		
1	532	533
2	547	503
3	134	159
4	454	520
5	201	207
6	532	546
7	145	171
8	555	453
H= 1, K= 8		
1	1007	568
2	186	179
3	1134	1207
4	125	95
5	556	590
6	153	76
7	206	159
9	172	169
H= 1, K= 9		
1	442	435
2	329	326
4	357	409
5	162	140
6	367	419
8	375	344
H= 1, K= 10		
1	821	803
2	144	125
3	655	675
4	145	170
5	397	413
6	101	175
7	223	206
H= 1, K= 11		
2	354	364
3	335	315
4	225	239
6	230	254
H= 1, K= 12		
1	508	539
3	469	479
5	237	284
H= 1, K= 13		
1	247	223
2	143	109
4	183	201
5	177	60
H= 1, K= 14		
1	284	285
2	184	121
3	331	352
H= 1, K= 15		
2	211	113
H= 2, K= 0		
0	2024	2107
1	202	173
2	1929	1953
3	358	344
4	1307	1363
5	683	709
6	606	677
7	424	445
8	225	184
9	253	257
H= 2, K= 1		
0	832	851
1	199	180
2	1457	1459
3	648	672
4	1115	1121
5	1074	1101
6	266	261
7	614	639
8	152	152
9	402	330
H= 2, K= 2		
0	2781	2923
1	884	838
2	1643	1682
3	657	652
4	854	850
5	204	208
6	709	786
7	432	471
8	248	297
9	392	380
H= 2, K= 3		
0	1706	1705
1	423	398
2	1117	1096
3	793	769
4	601	590
5	703	714
6	460	473
7	575	598
8	217	210
9	472	447
H= 2, K= 4		
0	2037	2118
1	395	377
2	1461	1480
3	463	447
4	493	479
5	306	313
6	626	645
7	337	428
8	249	233
9	341	300
H= 2, K= 5		
0	450	454
1	209	219
2	1106	1094
3	413	409
4	966	991
5	903	936
6	154	164
7	510	578
9	320	293
H= 2, K= 6		
0	1338	1325
2	1246	1219
3	271	272
4	868	893
5	495	452
6	427	459
7	322	319
9	198	206
H= 2, K= 7		
0	778	775
1	112	110
2	722	730
3	425	424
4	537	514
5	581	573
6	243	261
7	413	421
8	214	130
9	378	290
H= 2, K= 8		
0	1369	1391
1	452	438
2	952	920
3	367	363
4	415	401
6	447	477
7	268	276
8	244	202
H= 2, K= 9		
0	679	621
1	128	130
2	507	504
3	313	337
4	328	337
5	363	389
6	186	222
7	323	327
H= 2, K= 10		
0	705	692
2	647	625
3	122	136
4	445	464
5	246	240
6	257	268
7	195	202
H= 2, K= 11		
0	132	177
2	396	409
3	137	157
4	391	417
5	344	396
7	241	242
H= 2, K= 12		
0	507	488
2	490	409
3	138	132
4	295	300
5	146	130
6	219	209
H= 2, K= 13		
0	343	336
2	215	212
5	156	156
H= 2, K= 14		
0	390	402
1	170	172
2	210	246
4	101	123
H= 2, K= 15		
2	144	153
H= 3, K= 0		
1	942	923
2	308	302
3	1749	1807
4	843	831
5	691	646
6	647	675
7	105	71
8	425	421
9	178	129
10	370	315
H= 3, K= 1		
1	1933	2090
2	360	330
3	1127	1090
4	644	649
5	816	805
6	601	601
7	507	509
8	404	405
10	258	260
H= 3, K= 2		
1	1637	1652
2	142	135
3	976	871
4	809	804
5	553	576
6	656	744
7	315	345
8	356	391
10	340	277
H= 3, K= 3		
1	1692	1737
2	1139	1087
3	1127	1091
4	304	309
5	798	804
6	290	321
7	418	416
8	540	555
10	255	255
H= 3, K= 4		
1	1163	1172
2	178	175
3	1061	1010
4	715	693
5	553	546
6	619	643
7	213	203
8	344	359
H= 3, K= 5		
1	1519	1522
3	828	815
4	583	573
5	597	615
6	550	568
7	393	427
8	284	293
H= 3, K= 6		
1	729	676
2	225	217
3	1108	1116
4	572	558
5	486	486
6	499	485
8	340	320
H= 3, K= 7		
1	1099	1108
2	447	426
3	646	675
4	315	315
5	537	523
6	316	302
7	350	321
8	375	331
H= 3, K= 8		
1	910	937
2	111	114
3	364	345
4	441	427
5	294	313
6	432	434
7	257	263
9	253	249
H= 3, K= 9		
1	791	767
2	399	385
3	516	522
4	176	194
5	373	403
6	221	215
7	221	230
8	233	275
H= 3, K= 10		
1	389	372
3	556	566
4	291	302
5	263	265
6	269	291
H= 3, K= 11		
1	570	567
2	67	59
3	335	326
4	243	252
5	268	256
6	235	265
7	141	137
H= 3, K= 12		
1	306	293
3	321	325
4	162	203
5	165	190
6	192	198
H= 3, K= 13		
1	326	337
2	199	224
3	269	244
5	222	192
H= 3, K= 14		
1	273	275
3	139	104
H= 3, K= 15		
1	232	212
H= 4, K= 0		
0	721	706
1	1070	1072
2	803	792
3	999	968
4	574	521
5	294	302
6	129	160
7	669	711
9	586	595
H= 4, K= 1		
0	1609	1735
2	1807	1805
3	334	310
4	1259	1222
5	453	434
6	576	583
7	284	275
8	247	261
9	207	185
H= 4, K= 2		
0	1002	954
1	297	220
2	697	645
3	637	590
4	384	359
5	731	770
6	250	282
7	539	630
H= 4, K= 3		
0	1008	1020
1	242	223
2	1806	1791
3	326	304
4	1538	1559
5	289	240
6	315	329
7	311	317
9	177	198
H= 4, K= 4		
0	743	739
1	481	410
2	636	537
3	661	630
4	421	376
5	526	548
6	220	210
7	568	547
9	438	411
H= 4, K= 5		
0	1578	1678
2	1339	1314
3	224	219
4	912	804
5	330	349
6	516	527
7	205	220
9	268	259
H= 4, K= 6		
0	522	498
1	642	600
2	541	517
3	652	622
4	362	352
5	262	292
6	113	147
7	409	516
9	465	429
H= 4, K= 7		
0	903	841
2	1078	1094
3	203	206
4	892	846
5	225	226
6	311	316
7	192	276
8	166	167
H= 4, K= 8		
0	579	547
2	335	329
3	246	286
4	186	137
5	492	512
6	214	139
7	390	401
8	150	44
H= 4, K= 9		
0	601	579
2	815	812
3	137	144
4	683	713
5	141	172
6	276	219
7	176	169
9	173	114
H= 4, K= 10		
0	273	255
1	312	275
2	289	242
3	326	331
4	184	207
5	231	210
7	283	291
H= 4, K= 11		
0	675	698
3	121	93
4	315	257
5	161	173
6	197	256
H= 4, K= 12		
0	217	214
1	149	134
2	116	130
3	200	194
4	121	125
H= 4, K= 13		
0	237	221
1	138	53
2	368	374
4	331	357
H= 4, K= 14		
0	202	164
H= 5, K= 0		
1	481	468
2	555	581
3	208	205
4	740	730
6	700	715
7	161	148
8	553	567
H= 5, K= 1		
1	2023	2085
2	204	174
3	1157	1093
4	118	116
5	874	899
7	532	547
H= 5, K= 2		
2	143	117
3	262	255
4	548	529
5	108	102
6	766	853
8	353	421
H= 5, K= 3		
1	1614	1535
2	289	270
3	1285	1345
4	241	236
5	795	758
6	240	250
7	371	373
9	140	121
H= 5, K= 4		
1	157	175
2	251	232
3	85	103
4	773	759
6	678	693
8	275	411
H= 5, K= 5		
1	1586	1666
2	280	273
3	747	749
5	674	686
7	476	499
H= 5, K= 6		
1	329	321
2	279	356
3	52	108
4	549	524
6	535	539
8	428	414
H= 5, K= 7		
1	1108	1129
3	757	800
4	105	130
5	597	561
7	313	313
H= 5, K= 8		
3	204	231
4	577	543
6	482	513
8	205	255
H= 5, K= 9		
1	822	810
3	628	623
5	419	421
7	221	232
H= 5, K= 10		
2	222	205
4	307	310
6	246	305
7	139	56
H= 5, K= 11		
1	662	665
2	137	155
3	306	302
5	279	298
H= 5, K= 12		
1	124	122
4	177	222
H= 5, K= 13		
1	335	339
3	330	331
H= 6, K= 0		
0	81	67
2	363	350
3	575	556
4	406	402
5	656	643
7	636	650
9	439	407
H= 6, K= 1		
0	1349	1355
1	217	212
2	1517	1484
4	1165	1146
5	256	257
6	435	435
9	203	158
H= 6, K= 2		
0	705	701
1	470	446
2	234	207
3	679	684
5	491	502
6	292	293
7	517	576
9	410	452
H= 6, K= 3		
0	1413	1425
1	232	208
2	1390	1355
3	153	140
4	931	913
6	425	429
7	131	54
H= 6, K= 4		
0	396	358
1	379	350
2	216	211
3	557	557
4	158	196
5	509	479
6	193	209
7	543	532
9	399	402
H= 6, K= 5		
0	1027	1005
1	302	302
2	1161	1153
4	953	944
5	304	287
6	362	354
H= 6, K= 6		
1	208	205
2	240	254
3	420	358
4	257	257
5	482	467
7	452	476
H= 6, K= 7		
0	886	873
2	906	910
3	97	54
4	709	698
6	309	301
8	152	152
H= 6, K= 8		
0	464	461
1	267	256
3	312	392
5	254	299
6	191	203
7	284	242
H= 6, K= 9		
0	711	693
2	690	671
4	479	478
6	235	247
7	125	90
H= 6, K= 10		
0	138	119
2	114	144
3	235	240
4	150	156
5	232	263
6	116	82
H= 6, K= 11		
0	402	403
1	167	152
2	444	474
4	261	413
5	154	176
H= 6, K= 12		
0	148	134
2	115	110
3	149	165
4	147	77
H= 6, K= 13		
0	339	324
2	322	313
H= 7, K= 0		
2	98	116
3	701	705
4	655	734
5	311	304
6	711	695
7	143	135
9	302	300
H= 7, K= 1		
1	1201	1189
2	240	271
3	556	549
4	161	134
5	584	577
6	189	177
7	244	251
8	250	224
H= 7, K= 2		
1	551	552
2	458	419
3	611	578
4	487	505
5	340	355
6	465	473
7	119	146
8	381	439
H= 7, K= 3		
1	1317	1358
2	294	281
3	583	553
4	58	114
5	511	445
6	230	205
7	408	403
8	202	243
H= 7, K= 4		
1	449	473
2	231	233
3	578	565
4	508	495
5	341	321
6	520	435
8	333	348
H= 7, K= 5		
1	752	846
2	175	194
3	465	460
4	164	157
5	477	492
6	184	170
7	195	141
8	139	181
H= 7, K= 6		
1	396	406
3	496	495
4	495	491
5	229	230
6	479	496
H= 7, K= 7		
1	797	830
2	207	199
3	494	500
5	384	372
7	223	237
H= 7, K= 8		
1	335	335
2	339	324
3	343	332
4	283	276
5	245	230
6	275	265
H= 7, K= 9		
1	634	654
2	135	116
3	353	360
5	240	277
6	154	136
H= 7, K= 10		
1	706	733
3	274	284
4	252	270
H= 7, K= 11		
1	336	337
3	347	400
H= 7, K= 12		
1	192	182
3	216	177
H= 8, K= 0		
0	1212	1231
3	356	332
4	311	314
5	457	469
6	453	465
7	317	316
8	219	216
H= 8, K= 1		
0	724	732
2	794	776
3	282	270
4	576	565
5	391	371
6	239	209
7	251	273
H= 8, K= 2		
0	790	811
1	240	253
2	704	704
3	375	369
4	530	549
5	290	302
7	350	359
8	155	131
H= 8, K= 3		
0	861	870
1	167	192
2	664	649
3	149	149
4	432	435
5	538	516
6	304	290
7	277	269
H= 8, K= 4		
0	836	831
1	154	150
2	611	619
3	331	313
4	431	423
5	340	327
6	349	343
7	376	374
H= 8, K= 5		
0	514	513
1	116	133
2	672	644
3	245	256
4	504	505
5	255	243
6	127	149
7	219	222
H= 8, K= 6		
0	842	840
1	74	57
2	522	445
3	260	253
4	252	262
5	322	333
6	354	338
7	227	242
H= 8, K= 7		
1	573	556
2	453	478
3	133	147
4	316	335
5	311	292
6	210	195
H= 8, K= 8		
0	409	422
1	165	174
2	450	476
3	211	226
4	370	370
5	195	171
6	185	205
H= 8, K= 9		
0	426	425
2	345	360
3	122	116
4	251	251
5	207	249
H= 8, K= 10		
0	443	443
2	309	300
3	196	139
4	200	179
H= 8, K= 11		
0	224	223
2	241	249
3	163	125
H= 8, K= 12		
0	313	289
H= 9, K= 0		
1	842	855
2	253	264
3	645	654
4	238	226
5	443	452
6	159	185
7	263	253
H= 9, K= 1		
1	495	442
2	376	400
3	316	323
4	251	247
5	159	171
6	312	308
7	137	90
H= 9, K= 2		
1	675	677
2	131	47
3	857	871
4	223	236
5	419	446
7	172	135
H= 9, K= 3		
1	362	354
2	177	171
3	497	402
4	249	349
5	229	221
6	347	346
H= 9, K= 4		
1	667	575
2	158	173
3	704	703
4	234	212
5	403	392
6	239	233
7	148	164
H= 9, K= 5		
1	408	423
2	493	347
3	254	249
4	181	204
5	139	133
6	212	239
H= 9, K= 6		
1	626	624
2	197	190
3	510	437
4	196	173
5	363	363
6	126	149
H= 9, K= 7		
1	242	306
2	143	174
3	230	251
4	244	210
5	145	159
H= 9, K= 8		
3	549	545
5	263	277
H= 9, K= 9		
1	237	214
2	134	127
3	223	224
4	130	184
H= 9, K= 10		
1	367	372
2	139	92
3	302	295
H= 9, K= 11		
1	197	212
H= 10, K= 0		
0	657	937
1	131	132
2	662	662
3	136	151
4	503	492
6	373	367
H= 10, K= 1		
0	277	276
2	115	107
3	235	247
5	405	414
H= 10, K= 2		
0	643	373
2	687	665
5	139	211
6	391	329
H= 10, K= 3		
2	145	159
3	291	271
4	151	154
5	391	347
H= 10, K= 4		
0	775	707
4	439	405
6	314	315
H= 10, K= 5		
0	256	314
3	207	216
5	323	339
H= 10, K= 6		
0	632	647
1	87	96
2	509	507
4	343	373
H= 10, K= 7		
3	168	177
H= 10, K= 8		
0	490	518
2	477	422
H= 10, K= 9		
2	149	117
H= 11, K= 0		
1	527	553
2	116	105
3	649	658
5	390	365
H= 11, K= 1		
2	231	157
3	132	50
4	287	263
H= 11, K= 2		
1	633	644
3	493	507
5	328	317
H= 11, K= 3		
1	161	114
2	302	334
4	244	229
H= 11, K= 4		
1	533	549
3	513	437
H= 11, K= 5		
2	151	125
4	242	243
H= 11, K= 6		
1	421	422
3	483	440
H= 11, K= 7		
2	195	171
H= 12, K= 0		
0	469	458
2	451	471
H= 12, K= 1		
0	232	170
2	253	229
3	173	149
H= 12, K= 2		
0	544	563
2	399	423
H= 12, K= 3		
0	96	125
2	207	201
3	222	190
H= 12, K= 4		
0	444	470
2	395	393
H= 12, K= 5		
0	183	176

tion of the unit cell on the *ab* plane, showing the way in which bridging occurs around a single $BiCl_3$ molecule, is given in Fig. 3. The Bi–Cl bond length, and the number of bridging bonds in which the given chlorine is involved, correlate. Bond length Bi–Cl(1) is the shortest of the three; Cl(1) is involved in bridging to only one other bismuth atom. The two chlorine atoms involved in the longer Bi–Cl bonds each take part in bridging to *two* other bismuth atoms. In each case, the three bismuth atoms and the bridging chlorine atom are nearly coplanar; the sum of the Bi–Cl···Bi angles is 358·7° around Cl(2) and 359·4° around Cl(3).

Comparison with other Group V trihalide structures

A structure of antimony trichloride has been proposed (Lindqvist & Niggli, 1956) in which it is assigned to orthorhombic centrosymmetric space group *Pbnm* rather than to the non-centric $Pbn2_1$. (These are equivalent to *Pnma* and $Pn2_1a$ with interchange of axes.) The centrosymmetric space group was selected because, with the rather limited refinement used (difference Fourier techniques) and resulting large estimated standard deviations, the two symmetries could not be distinguished.

β-Antimony tribromide appears to be isostructural with antimony trichloride (Cushen & Hulme, 1962). Again, it was reported that the centric space group

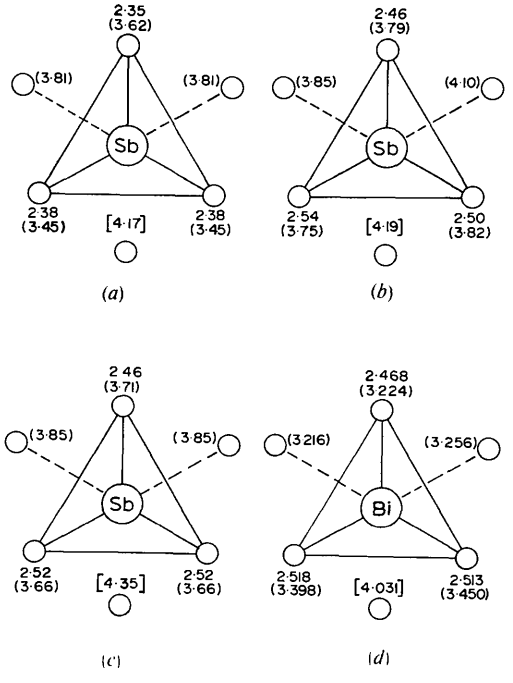

Fig. 4. Proposed triangular prism model for group VA trihalides, showing bonding distances, bridging distances (in parentheses), and the nearest non-bonded halogen (in square brackets). (*a*) $SbCl_3$, space group *Pbnm*. (*b*) α-$SbBr_3$, space group $P2_12_12_1$. (*c*) β-$SbBr_3$, space group *Pbnm*. (*d*) $BiCl_3$, space group $Pn2_1a$, (present structure).

was the correct choice, based on a statistical $N(z)$ test of the projection data used for structure determination. Our analysis, however, supports a non-centric structure for bismuth trichloride.

The differences between the structure proposed here and that obtained by using the higher symmetry of *Pnma*, are small but significant. Because of the relaxation in symmetry, some changes occur in bond lengths and angles. However, the main difference appears to be that the bismuth trichloride molecule is rotated roughly 1·3° about its approximate threefold axis. Consequently, Cl(2) and Cl(3) are each displaced in the *z* direction from the *Pnma* position by about $\pm 0{\cdot}06$ Å. In all cases, the mean of the appropriate Cl(2) and Cl(3) atomic coordinates in $Pn2_1a$ is within $0{\cdot}5\sigma$ of the *Pnma* position. Apparently, then, such differences, if they exist in β-$SbBr_3$ and $SbCl_3$, are too small to have been detected by the techniques used, and the structure of these molecules should be re-examined.

Note that α-$SbBr_3$ *does* crystallize in a non-centric space group ($P2_12_12_1$, Cushen & Hulme, 1963), where there is no question of space-group ambiguity and no restriction on site symmetry. Therefore, there seems to be no reason why the site symmetry of the other trihalides should be such as to require the centric space group.

A comparison of the cell dimensions of $SbCl_3$ and $BiCl_3$ indicates that a considerable shrinking of the cell has occurred in the present structure ($SbCl_3$: 8·12, 9·47, 6·37, e.s.d.'s unknown; $BiCl_3$: 7·641, 9·172, 6·291). This contrasts with the expansion that would be expected to accommodate the larger bismuth covalent and van der Waals radii. The strong bridging Cl–Bi action appears to be responsible for this cell shrinkage in the bismuth trichloride structure. However, since the two compounds appear to be isostructural, we might well conclude that the observed Sb···Cl distances of 3·5 Å, previously ruled out (Lindqvist & Niggli, 1956) as 'long distances', in fact are very weak bridging interactions (the sum of the van der Waals radii for antimony and chlorine is 4·0 Å). Examination of solid $SbCl_3$, using laser Raman spectroscopy (Denchik *et al.*, 1971), has not revealed any bridging vibration modes for chlorine atoms; but again, this may be a result of the very weakness of such an interaction. Solid $BiCl_3$ shows clear indication of bridging-mode vibration for the chlorine atoms.

Since halide bridging has clearly been established in this structure, we feel confident that it is possible to reinterpret some of the known structures of Group VA trihalides in terms of the trigonal prismatic model.

Fig. 4 shows three antimony trihalide structures and the structure of bismuth trichloride. In all cases, three halogen atoms are clearly bonded, five appear as bridging, and one (the third face-bridging position) is at a van der Waals distance from the central atom. It is located in the middle of this third face, in the depression formed between the four halogen atoms defining the face.

We thank Dr W. C. Hamilton for helpful comments and discussion on the question of space-group ambiguity. We also acknowledge the help of Miss E. Denchik for growing the crystal used in the analysis. Figs. 1 and 3 were prepared using computer program *ORTEP* (Johnson, 1965). The full-matrix least-squares program used in the refinement of the structure was *XFLS* (Ellison, unpublished). Standard deviations of bond lengths and angles were calculated with program *ORFFE* (Busing, Martin & Levy, 1962).

Receipt of a grant from the National Research Council of Canada is gratefully acknowledged.

References

ABRAHAMS, S. C. & BERNSTEIN, J. L. (1965). *Acta Cryst.* **18**, 926.
BUERGER, M. J. (1942). *X-ray Crystallography*. New York: John Wiley.
BUSING, W. R., MARTIN, K. O. & LEVY, H. A. (1962). Report ORNL-TM-306. Oak Ridge National Laboratory, Oak Ridge, Tennessee.
CHOI, C. S. & BOUTIN, H. (1968). *J. Chem. Phys.* **48**, 1397.
COPPENS, P. (1970). *DATAP3, a Single Crystal X-ray Absorption Correction Program*. In *Crystallographic Computing*. Copenhagen: Munksgaard.
CROMER, D. T. & MANN, J. B. (1968). *Acta Cryst.* A**24**, 321.
CUSHEN, D. W. & HULME, R. (1962). *J. Chem. Soc.* p. 2218.
CUSHEN, D. W. & HULME, R. (1964). *J. Chem. Soc.* p. 4162.
DENCHIK, E., NYBURG, S. C., OZIN, G. A. & SZYMAŃSKI, J. T. (1971). *J. Chem. Soc.* In the press.
ELLISON, R. D., *XFLT, an Extensively Modified Version of ORFLS*. Report ORNL-TM-305. Oak Ridge National Laboratory, Oak Ridge, Tennessee. Unpublished.
HAMILTON, W. C. (1965). *Acta Cryst.* **18**, 502.
Handbook of Chemistry and Physics (1967). 48th edition, p. B-159. The Chemical Rubber Company, Cleveland, Ohio.
International Tables for X-ray Crystallography (1962). Vol. III, p. 215, 216. Birmingham: Kynoch Press.
JOHNSON, C. K. (1965). *ORTEP, a Fortran Thermal-Ellipsoid Plot Program for Crystal Structure Illustrations*. Report ORNL-3794, Oak Ridge National Laboratory, Oak Ridge, Tennessee.
LEUNG, F. & NYBURG, S. C. (1969). *Chem. Commum.* p. 137.
LINDQVIST, I. & NIGGLI, A. (1956). *J. Inorg. Nucl. Chem.*, **2**, 345.
PARTHASARATHY, R., SIME, J. G. & SPEAKMAN, J. C. (1969). *Acta Cryst.* B**25**, 1201.
PAULING, L. (1960). *The Nature of the Chemical Bond*, 3rd ed. Ithaca: Cornell Univ. Press.
SAHL, K. & ZEMANN, J. (1961). *Naturwissenschaften*, **48**, 641.
WOLTEN, C. M. & MAYER, S. W. (1958). U. S. Atomic Energy Commission Report NAA-SR-2939, and *Acta Cryst.* **11**, 739.

Acta Cryst. (1971). B**27**, 2304

The Crystal and Molecular Structure of [Co(QP)Cl]BPh_4 QP = tris(*o*-diphenylphosphinophenyl)phosphine)

BY T. L. BLUNDELL* AND H. M. POWELL

Chemical Crystallography Laboratory, South Parks Road, Oxford OX1 3QS, England

(*Received* 27 *July* 1970 *and in revised form* 29 *December* 1970)

The crystal and molecular structure of [Co(QP)Cl]BPh_4 [QP = tris(*o*-diphenylphosphinophenyl)phosphine] is reported. The compound crystallizes in space group $P2_1nb$, $a = 18{\cdot}85 \pm 0{\cdot}02$, $b = 18{\cdot}25 \pm 0{\cdot}02$, $c = 18{\cdot}60 \pm 0{\cdot}02$ Å. The X-ray analysis, involving the use of anomalous scattering techniques in the solution of the phase problem, has shown the cation to have a distorted trigonal bipyramidal coordination of the cobalt in a $[Co(QP)Cl]^+$ ion. Although the ligand can have trigonal symmetry, there is a large distortion from threefold axial symmetry, giving an equatorial angle of 137·2°. Arguments are presented to show that this may be a Jahn–Teller effect. The angles between the equatorial and the axial cobalt–phosphorus bonds are $86{\cdot}5 \pm 0{\cdot}6°$, and the axial cobalt–phosphorus bond length, 2·057 Å, is significantly shorter than the equatorial bond lengths of 2·261, 2·280 and 2·318 Å. There are many van der Waals contacts between phenyl groups of the QP ligand and between these and the axial chlorine atom.

Introduction

Although the results of many X-ray crystal structure analyses are now available for pentacoordinate complexes, the stereochemical problem has not yet been fully resolved.

Early theoretical work of Pauling (1939), Daudel & Bucher (1945) and Linnett & Mellish (1954) for instance, gave conflicting predictions about the relative stabilities of the two ideal geometries, the trigonal bipyramid and the square pyramid. It has other shortcomings. Even when different approaches predict the same preferred stereochemistry, the characterization of the bonding is different; the theories often predict the wrong relative strengths for the equatorial and apical

* Present address: Laboratory of Molecular Biophysics, South Parks Road, Oxford, England.